SECTION A-A

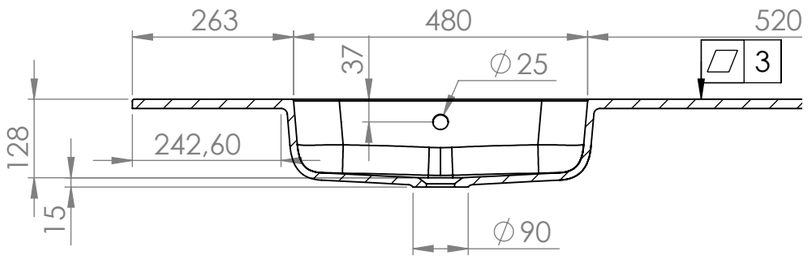

Asia wastafel 160 CM

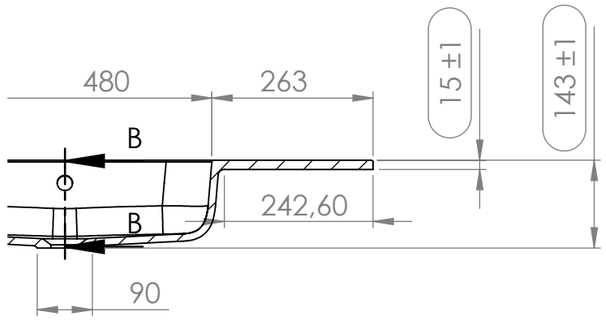

SECTION B-B

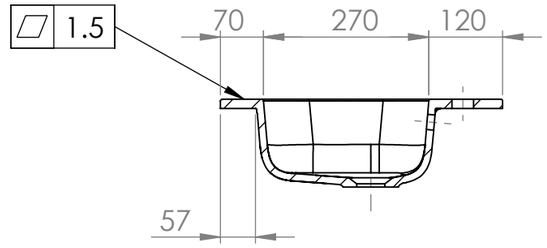

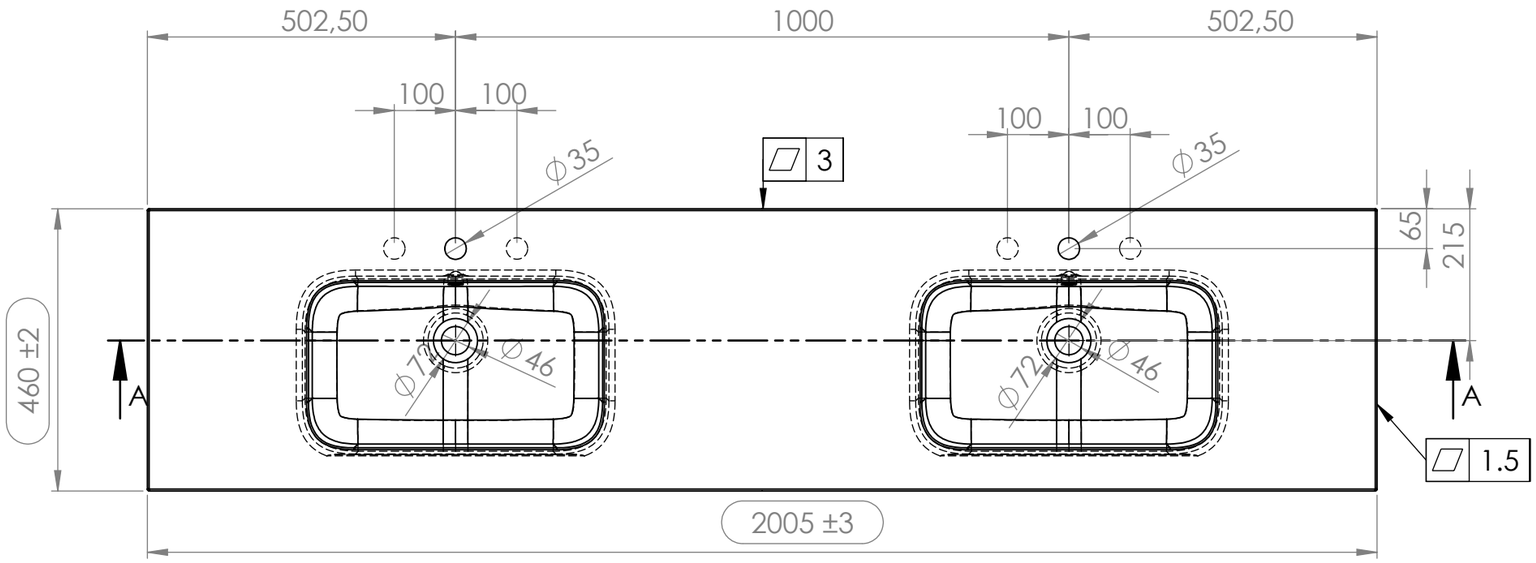

UNLESS OTHERWISE SPECIFIED: DIMENSIONS ARE IN MILLIMETERS SURFACE FINISH: TOLERANCES: LINEAR: ANGULAR:	FINISH:			DEBURR AND BREAK SHARP EDGES	DO NOT SCALE DRAWING	REVISION
	NAME	SIGNATURE	DATE		Asia wastafel 200 CM	
DRAWN						
CHK'D						
APPV'D						
MFG						
Q.A						A3
				WEIGHT:	SCALE:1:10	SHEET 1 OF 1