SECTION A-A

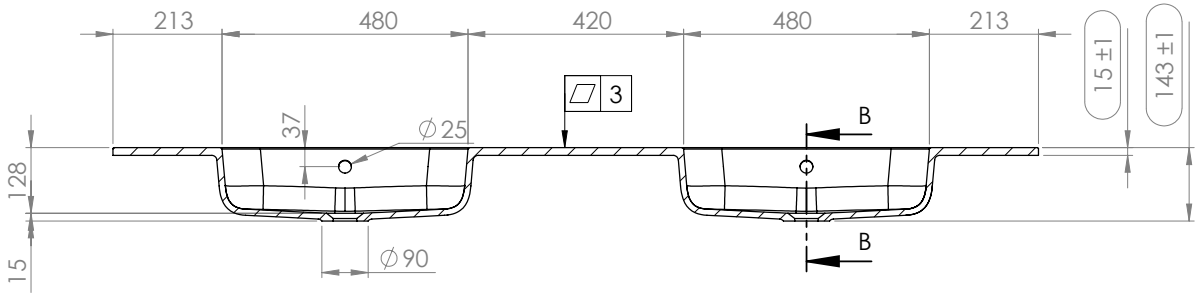

SECTION B-B

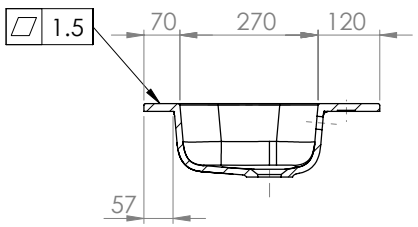

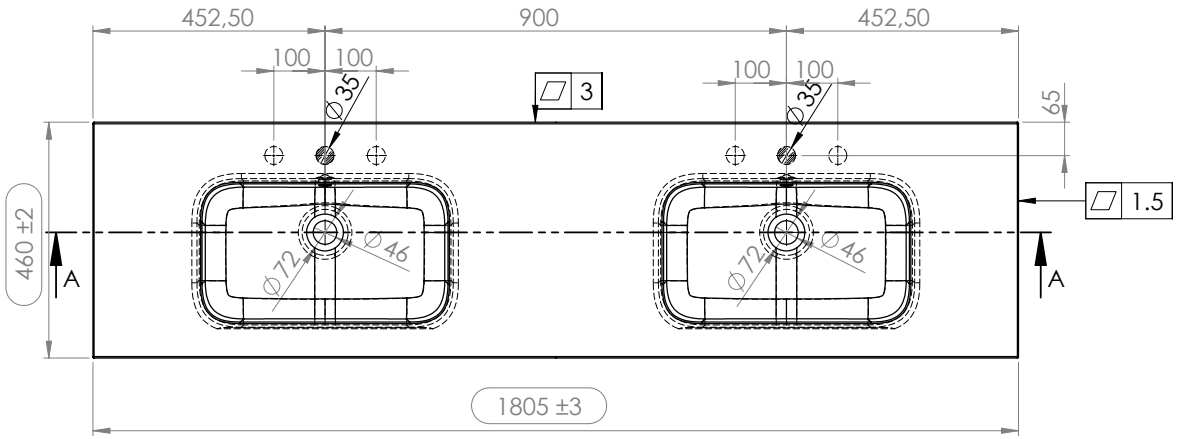

Asia wastafel 180 cm

WEIGHT:	SCALE:1:10	SHEET 1 OF 1